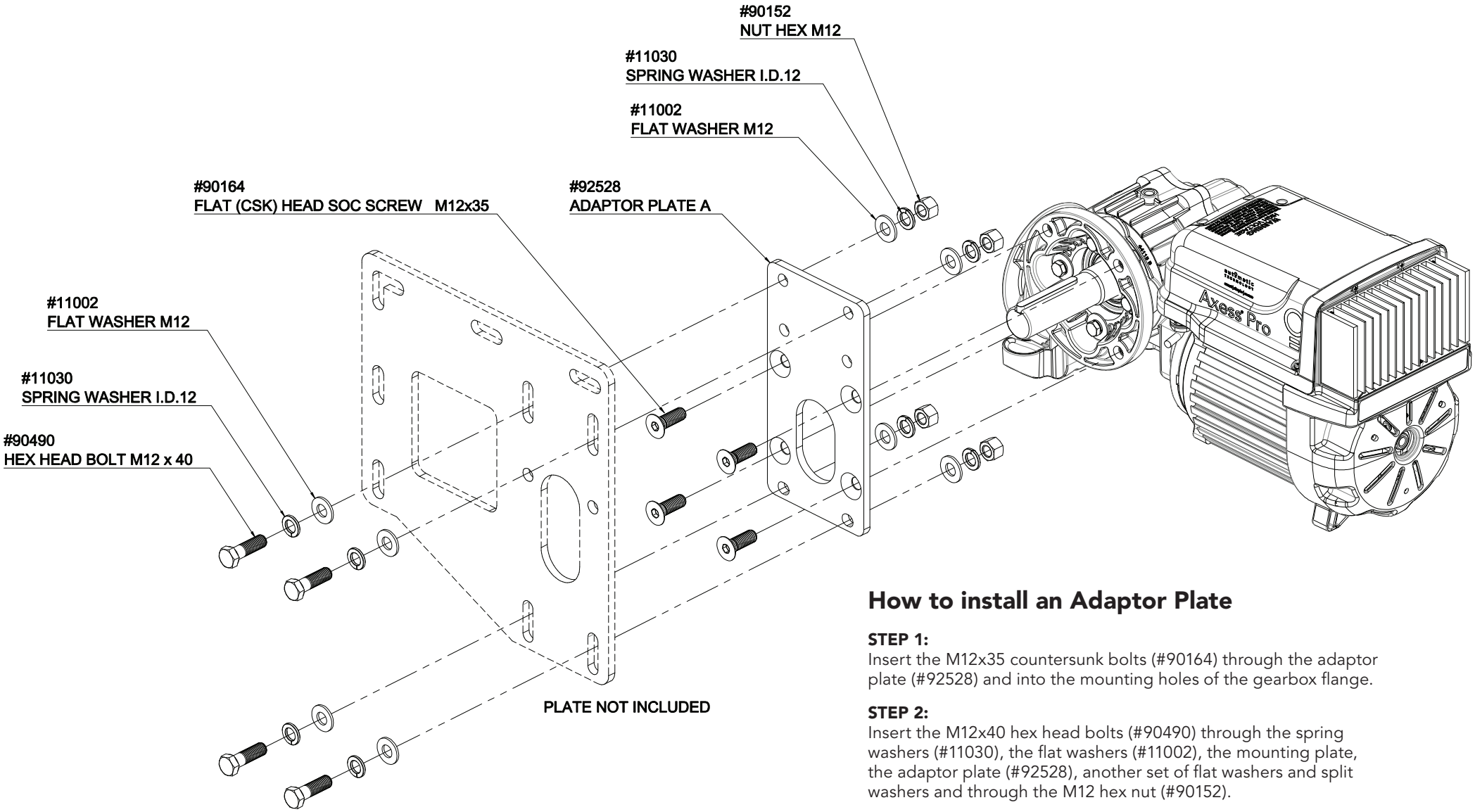

How to install an Adaptor Plate

STEP 1:
Insert the M12x35 countersunk bolts (#90164) through the adaptor plate (#92528) and into the mounting holes of the gearbox flange.

STEP 2:
Insert the M12x40 hex head bolts (#90490) through the spring washers (#11030), the flat washers (#11002), the mounting plate, the adaptor plate (#92528), another set of flat washers and split washers and through the M12 hex nut (#90152).

Part # 92648 (instruction)